Flowmetrics, Inc.
"Where Quality is Measurable"
9201 Independence Avenue
Chatsworth, CA 91311, USA
http://www.flowmetrics.com
(818) 407-3420 • (800) 356-6387
Fax (818) 700-1961

925-ES747

Flow Computer for Liquid and Gas Applications

Features

- Supports Pulse Producing Flowmeters
- Rate/Total and Batching Functions
- Universal Viscosity Curve (UVC) and Strouhal/Roshko Advanced Linearization Methods
- Gas & Liquid Flow Equations (Volume, Mass, Corrected Volume)
- API 2540, AGA-7 Equations
- 10 Selectable Fluid Tables
- Advanced Batching Features: Overrun Compensation, Print End of Batch
- Menu Selectable Hardware & Software Features
- Data Logging
- Two Line LCD, OLED or VFD Display
- Isolated Pulse and Analog Outputs Standard
- RS-232 Port Standard, RS-485 Optional
- Windows™ Setup Software
- DDE Server & HMI Software Available

Description:
The 925-ES747 Flow Computer satisfies the instrument requirements for pulse producing flowmeters in liquid and gas applications. Multiple flow equations and instrument functions are available in a single unit with many advanced features.

The alphanumeric display shows measured and calculated parameters in easy to understand format. Single key direct access to measurements and display scrolling is supported

The versatility of the 925-ES747 permits a wide measure of versatility within the instrument package. The various hardware inputs and outputs can be "soft" assigned to meet a variety of common application needs. The user "soft selects" the usage of each input/output while configuring the instrument.

The isolated analog output can be chosen to follow volume flow, corrected volume flow, mass flow, temperature, pressure or density by means of a menu selection. Most hardware features are assignable by this method.

The user can assign the standard RS-232 Serial Port for data recording, transaction printing, or for connection to a computer.

Front panel selection of fluid type is supported.

Linearization options include UVC, Strouhal/Roshko and 40 point linearization tables.

A Service or Test mode is provided to assist the user during start-up system check out by monitoring inputs and exercising outputs and printing system setup.

Specifications:

Flow Meters and Computations
Meter Types: Supports pulse producing meters including: vortex, single rotor turbine, magnetic, PD flowmeter
Linearization: 40 point table, UVC table or Strouhal/Roshko
Computations: Volume, Corrected Volume & Mass
Fluid Computations: Density, Viscosity

Environmental
Operating Temperature: 0°C to +50°C
Storage Temperature: -40°C to +85 C
Humidity : 0-95% Non-condensing
Materials: U.L. approved

Approvals: CE Compliant, UL/CUL Listed

Display
Type: 2 lines of 20 characters, Blue VFD or Backlit LCD
Character Size: 0.3" nominal
User programmable label descriptors and units of measure

Keypad
Keypad Type: Membrane Keypad with 16 keys
Keypad Rating: Sealed to Nema 4

Enclosure
Size: See Dimensions
Depth behind panel: 6.5" including mating connector
Type: DIN
Materials: Plastic, UL94V-0, Flame retardant
Bezel: Textured per matt finish

Fluid Types
General Purpose, Water, Skydrol 500B, 50/50 Ethylene, Air, Propane, MIL-C-7024D, MIL-O-5606, MIL-23699, JETA-1, Diesel, Methanol

99952 06/15/16

Real Time Clock

The 925-ES747 is equipped with a battery backed real time clock with display of time and date.

Format:

12 or 24 hour time display

Day, Month, Year date display

Excitation Voltage

Menu Selectable: 5, 12 or 24 VDC @ 100 mA (fault protected with self resetting fuse)

Relay Outputs

The relay outputs are menu assignable to (Individually for each relay) Low Rate Alarm, Hi Rate Alarm, Prewarn Alarm, Preset Alarm, Temperature, Pressure, Density or General purpose warning (security).

Number of relays: 2 (4 optional)

Contact Style: Form C contacts

Contact Ratings: 5 amp, 240 VAC or 30 VDC

Capabilities: Alarm Delay, Setpoint, Hysteresis, Duration

Power Input

The factory equipped power option is internally fused. An internal line to line filter capacitor and MOV are provided for added transient suppression.

110 VAC Power: 85 to 127 Vrms, 50/60 Hz

220 VAC Power: 170 to 276 Vrms, 50/60 Hz

DC Power:

12 VDC (10 to 14 VDC)

24 VDC (14 to 28 VDC)

Power Consumption:

AC: 11.0 VA (11W)

DC: 300 mA max.

Flow Inputs:

Pulse Inputs:

Number of Flow Inputs: one input available for single pickup or with dual pickups or quadrature

Input Impedance: 10 KΩ nominal

Pullup Resistance: 10 KΩ to 5 VDC (menu selectable)

Pull Down Resistance: 10 KΩ to common

Trigger Level: (menu selectable)

High Level Input

Logic On: 3 to 30 VDC

Logic Off: 0 to 1 VDC

Low Level Input (mag pickup)

Sensitivity:

10 mV or 100 mV

Minimum Count Speed:

Menu selectable: 1-99 seconds

Maximum Count Speed:

Menu Selectable: 40Hz, 3000Hz or 20 kHz

Overvoltage Protection: 50 VDC

Control Inputs

Switch Inputs are menu selectable for Start, Stop, Reset, Lock, Inhibit, Alarm Acknowledge, Print or Not Used.

Control Input Specifications

Number of Control Inputs: 3

Input Scan Rate: 10 scans per second

Logic 1: 4 - 30 VDC

Logic 0: 0 - 0.8 VDC

Input Impedance: 100 KΩ

Control Activation:

Positive Edge or Pos. Level based on product definition for switch usage.

Auxiliary / Compensation Inputs

The auxiliary/compensation inputs are menu selectable for temperature, pressure, density or not used. These inputs are used for the compensated inputs when performing compensated flow calculations. They can also be used as a general purpose input for display and alarming.

Number of inputs: 2

Operation: Ratiometric

Accuracy: 0.02% FS at 20° C

Basic Measurement Resolution:

16 bit

Update Rate: 1 update/sec minimum

Automatic Fault detection:

Signal Over-range/under-range

Current Loop Broken

RTD short

RTD open

Fault mode to user defined default settings

Fault Protection:

Reverse Polarity: No ill effects

Over-Voltage Limit (Voltage Input): 50 VDC

Available Input Ranges

Voltage: 0-10 VDC, 0-5 VDC, 1-5 VDC

Current: 4-20 mA, 0-20 mA

Resistance: 100 Ohms DIN RTD

Proprietary Thermistor

100 Ohm DIN RTD (liquid equations only)

(DIN 43-760, BS 1904):

Three Wire Lead Compensation

Internal RTD linearization learns ice point resistance

1 mA Excitation current with reverse polarity protection

Temperature Resolution: 0.1°C

Isolated Analog Output

The analog output is menu assignable to correspond to the Uncompensated Volume Rate, Corrected Volume Rate, Mass Rate, Temperature, Pressure, Density, Volume Total, Corrected Volume Total or Mass Total.

Type: Isolated Current Sourcing
Available Ranges: 4-20 mA, 0-20 mA
Resolution: 12 bit
Accuracy: 0.05% FS at 20° C
Update Rate: 1 update/sec minimum
Temperature Drift: Less than 200 ppm/C
Maximum Load: 1000 ohms (at nominal line voltage)
Compliance Effect: Less than .05% Span
60 Hz rejection: 40 dB minimum
Calibration: Operator assisted Learn Mode
Averaging: User entry of damping constant to cause a smooth control action

Isolated Pulse output

The isolated pulse output is menu assignable to Uncompensated Volume Total, Compensated Volume Total or Mass Total

Pulse Output Form: Photo MOS Relay
Maximum On Current: 100 mA
Maximum Off Voltage: 30 VDC
Saturation Voltage: 1.0 VDC
Maximum Off Current: 0.1 mA
Pulse Duration: 10 mSec or 100 mSec (user selectable)
Pulse output buffer: 256
Fault Protection
Reverse polarity: Shunt Diode

Serial Communication

The serial port can be used for printing, data recording, and/or communication with a computer.

RS-232:
Device ID: 01-99
Baud Rates: 300, 600, 1200, 2400, 4800, 9600, 19200
Parity: None, Odd, Even
Handshaking: None, Software, Hardware
Print Setup: Configurable print list and formatting

RS-485: (optional 2nd COM port)
Device ID: 01-247
Baud Rates: 2400, 4800, 9600, 19200
Parity: None, Odd, Even
Protocol: Modbus RTU (Half Duplex)

Setup Diskette Capabilities

Capabilities include: View Live Results Configure unit, Upload and Download to unit, Load and Save to file, Print Setup,

Data Logging Capabilities

Capabilities:
Permits unit to automatically gather data during use.

Data Log List:
User selectable: includes process variables, totalizers, set points, time and date

Data Log Event Trigger:
selectable: includes interval, time of day, front key, external contact, end of batch

Data Log Format:
selectable: Printer format, Database CSV format

Data Transmission:
Selectable: Output may be transmitted immediately or held in data log for later polling

Remote Request Capabilities include:
Send data log, clear data log

External Modem Support Capabilities:

Compatibility: Hayes Compatible

Polling Capabilities:
Answers incoming calls, responds to requests for information of action

Call Out Capabilities:
Can initiate call on user selectable event condition, or upon error

Error Handling:
Supports multiple retry, automatic disconnect upon loss of line or remote inactivity

Fig. 1: Standard Dimensions

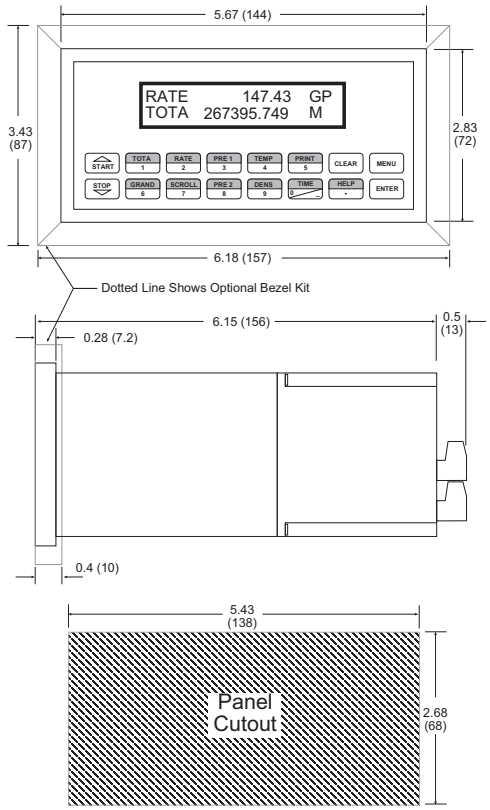

Dimensions are in inches (mm)

Fig. 2: Wall Mount ("W" mounting option) Dimensions

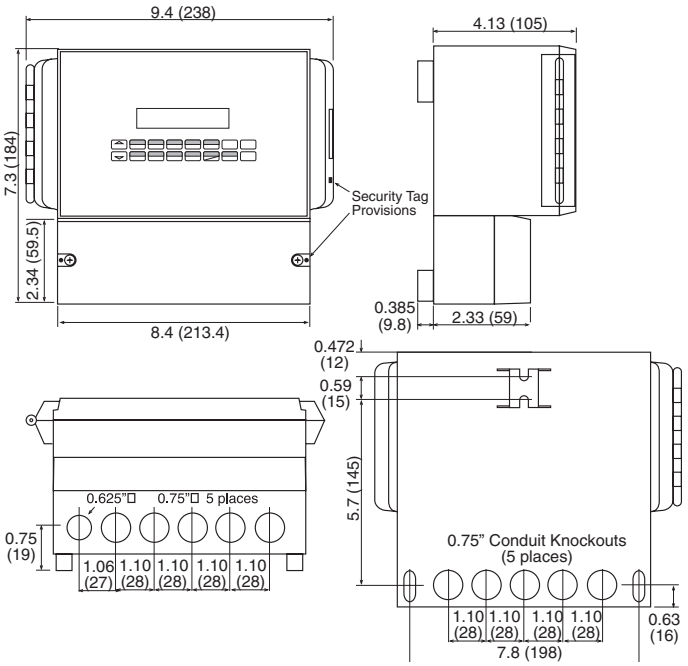

Terminal Designations

1	DC OUTPUT																								
2	PULSE IN 1																								
3	PULSE IN 2																								
4	COMMON																								
5	--------																								
6	RTD EXCIT +	Vin +	Pressure																						
7	RTD SENS +	Thermistor																							
8	RTD SENS -	Iin +	Temp.	Iin +	Pressure																				
9	CNTR IN 1																								
10	CNTR IN 2																								
11	CNTR IN 3																								
12	COMMON																								
13	PULSE OUTPUT +																								
14	PULSE OUTPUT -																								
15	ANALOG OUTPUT +																								
16	ANALOG OUTPUT -																								
17	NC																								
18	COM RLY1																								
19	NO																								
20	NC																								
21	COM RLY2																								
22	NO																								
23	AC LINE																								
24	AC LINE																								

Terminal Layout

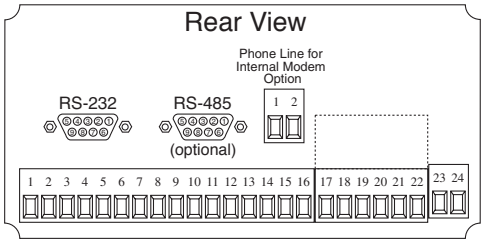

Ordering Information

Example 925-ES747 L 1 A 0 P TB

Series:

Display Type:
- L= LCD
- O= OLED
- V= VFD

Input Type:
- 1= 110 VAC
- 2= 220 VAC
- 3= 12 VDC (10 to 14 VDC)
- 4= 24 VDC (14 to 28 VDC)

Relays:
- A= 2 SPDT Relays
- B= 4 SPDT Relays

Network Card:
- 0= None (STD)
- 2= RS485/Modbus (optional 2nd COM port)

Mounting:
- **P**= Panel Mount ..... (see Fig. 1)
- N= NEMA 4 Wall Mount
- W= NEMA 12/13 Wall Mount w/ Clear Cover ..... (see Fig.2)
- E= Explosion Proof (No Button Access)

Options:
- TB= RS485 Terminal Block for Panel Mount Enclosure
- ET= Extended Tempertaure
  - -4°F to 131°F (-20°C to 55°C)
- IM = Internal Modem
- M = Modem Power Option

Accessories:

OPC/DDE Server for RS232 Port available, see EX5-UCOND-NA00
OPC/DDE Server for Modbus Suite available, see EX5-MDBUS-NA00
Modem Available, see MPP-56KN and MPP-2400N
Serial printer available, see P1000, P295
Ethernet Port Server available, see IEPS
Ethernet Port Server Modbus TCP available, see ADAM4572
RS-422/485 to RS-232 Communication Adapter available, see CA285
RS232 Extender Cable: P/N=13220-<length in inches>